P&M Aviation Ltd
Unit B
Crawford Street
Rochdale
Lancashire OL16 5NU
Great Britain
Tel: +44 (0) 1706 655134
Fax: +44 (0) 1706 631561
flying@pmaviation.co.uk

Quik GT450 Wing
Illustrated Parts Catalogue

Contents

		Page No
YQD-000	General Arrangement	2
YQD-001	GT450 Wing	3
YQD-010	Keel Assembly	4
YQD-020	Leading Edge Assembly	5
YQD-030	Cross Boom Assembly	6
YQD-040	Control Frame	7
YQD-050	Wing Final Assembly	9
YQD-051	King Post Assembly	13
YQD-070	Fin Tube Assembly	14
YQD-080	Tip Fin Assembly	15
YQD-7100	Wing Ribs	16
YQC-017	Keel Rigging Strut Assembly	17

This manual should be used in conjunction with the Operators Manual. Some parts that are listed are not user serviceable. The following drawings are provided as a convenience to aid identification of parts for the ordering of spare parts from the factory. When ordering parts be sure to include the exact aircraft type and model, including engine number and aircraft registration/serial number, together with a description of the part and part number where applicable.

All drawings are copyright of P&M Aviation Ltd.

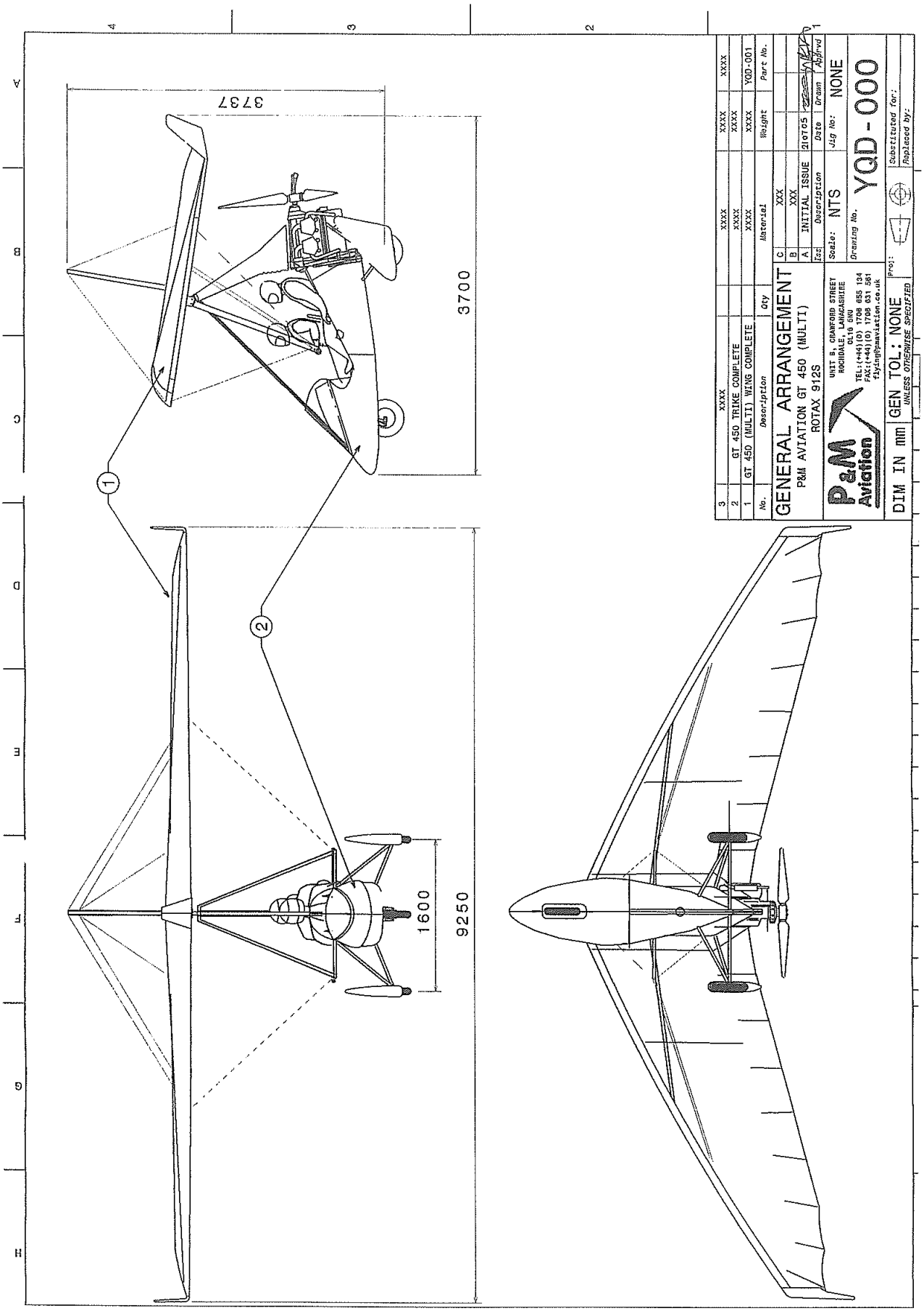
3737
3700
9250
1600
1
2
3 XXXX XXXX XXXX XXXX
2 GT 450 TRIKE COMPLETE XXXX XXXX XXXX
1 GT 450 (MULTI) WING COMPLETE XXXX XXXX YQD-001
No. Description Qty Material Weight Part No.
GENERAL ARRANGEMENT
P&M AVIATION GT 450 (MULTI)
ROTAX 912S
C XXX
B XXX
A INITIAL ISSUE 210705
Iss Description Date Drawn Apprvd
Scale: NTS
Jig No: NONE
Drawing No. YQD-000
P&M Aviation
UNIT B, CRANFORD STREET
ROCHDALE, LANCASHIRE
OL16 5NU
TEL:(+44)(0) 1708 655 134
FAX:(+44)(0) 1708 631 561
flying@pmaviation.co.uk
DIM IN mm
GEN TOL: NONE
UNLESS OTHERWISE SPECIFIED
Proj:
Substituted for:
Replaced by:

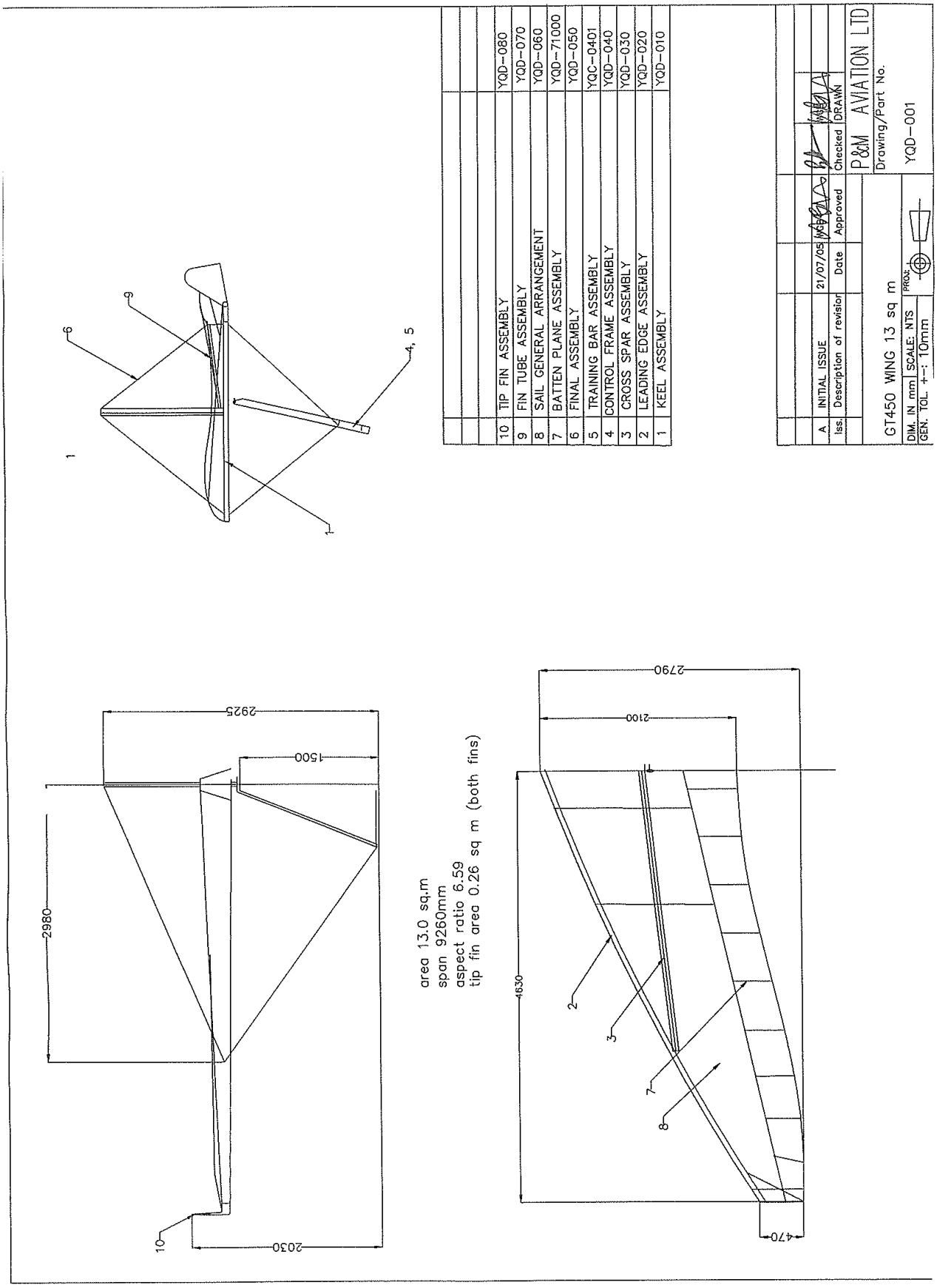
1
6
9
4, 5
7
2925
1500
2980
2030
10
area 13.0 sq.m
span 9260mm
aspect ratio 6.59
tip fin area 0.26 sq m (both fins)
2790
2100
4630
470
2
3
7
8
10 TIP FIN ASSEMBLY YQD-080
9 FIN TUBE ASSEMBLY YQD-070
8 SAIL GENERAL ARRANGEMENT YQD-060
7 BATTEN PLANE ASSEMBLY YQD-71000
6 FINAL ASSEMBLY YQD-050
5 TRAINING BAR ASSEMBLY YQC-0401
4 CONTROL FRAME ASSEMBLY YQD-040
3 CROSS SPAR ASSEMBLY YQD-030
2 LEADING EDGE ASSEMBLY YQD-020
1 KEEL ASSEMBLY YQD-010
A INITIAL ISSUE 21/07/05
Iss. Description of revision Date Approved Checked DRAWN
P&M AVIATION LTD
GT450 WING 13 sq m
Drawing/Part No.
YQD-001
DIM. IN mm SCALE: NTS
GEN. TOL. +-: 10mm

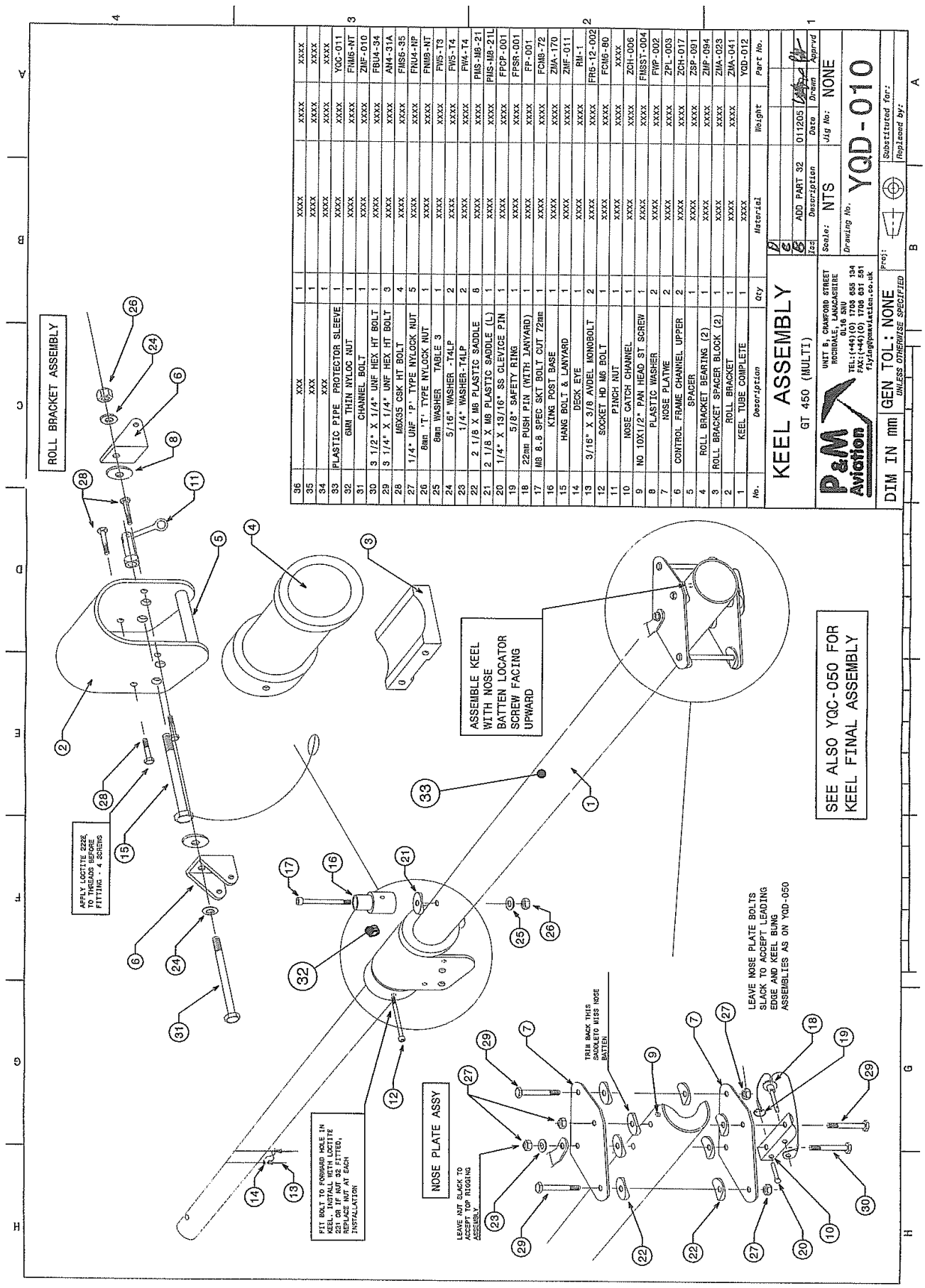

No.	Description	Qty	Material	Weight	Part No.
36	XXX	1	XXXX	XXXX	XXXX
35	XXX	1	XXXX	XXXX	XXXX
34	XXX	1	XXXX	XXXX	XXXX
33	PLASTIC PIPE PROTECTOR SLEEVE	1	XXXX	XXXX	YQC-011
32	6MM THIN NYLOC NUT	1	XXXX	XXXX	FNM6-NT
31	CHANNEL BOLT	1	XXXX	XXXX	ZMF-010
30	3 1/2" X 1/4" UNF HEX HT BOLT	1	XXXX	XXXX	FBU4-34
29	3 1/4" X 1/4" UNF HEX HT BOLT	3	XXXX	XXXX	AH4-31A
28	M8X35 CSK HT BOLT	4	XXXX	XXXX	FMS6-35
27	1/4" UNF 'P' TYPE NYLOCK NUT	5	XXXX	XXXX	FNU4-NP
26	8mm 'T' TYPE NYLOCK NUT	1	XXXX	XXXX	FNM8-NT
25	8mm WASHER TABLE 3	1	XXXX	XXXX	FW5-T3
24	5/16" WASHER -T4LP	2	XXXX	XXXX	FW5-T4
23	1/4" WASHER-T4LP	2	XXXX	XXXX	FW4-T4
22	2 1/8 X M8 PLASTIC SADDLE	6	XXXX	XXXX	FMS-M8-21
21	2 1/8 X M8 PLASTIC SADDLE (L)	1	XXXX	XXXX	FMS-M8-21L
20	1/4" X 13/16" SS CLEVICE PIN	1	XXXX	XXXX	FPCP-001
19	5/8" SAFETY RING	1	XXXX	XXXX	FPSR-001
18	22mm PUSH PIN (WITH LANYARD)	1	XXXX	XXXX	FP-001
17	M8 8.8 SPEC SKT BOLT CUT 72mm	1	XXXX	XXXX	FCM8-72
16	KING POST BASE	1	XXXX	XXXX	ZMA-170
15	HANG BOLT & LANYARD	1	XXXX	XXXX	ZMF-011
14	DECK EYE	1	XXXX	XXXX	RM-1
13	3/16" X 3/8 AVDEL MONOBOLT	2	XXXX	XXXX	FR6-12-002
12	SOCKET HD M6 BOLT	1	XXXX	XXXX	FCM6-80
11	PINCH NUT	1	XXXX	XXXX	XXXX
10	NOSE CATCH CHANNEL	1	XXXX	XXXX	ZCH-006
9	NO 10X1/2" PAN HEAD ST SCREW	1	XXXX	XXXX	FMSST-004
8	PLASTIC WASHER	2	XXXX	XXXX	FWP-002
7	NOSE PLATWE	2	XXXX	XXXX	ZPL-003
6	CONTROL FRAME CHANNEL UPPER	2	XXXX	XXXX	ZCH-017
5	SPADER	1	XXXX	XXXX	ZSP-091
4	ROLL BRACKET BEARING (2)	1	XXXX	XXXX	ZMF-094
3	ROLL BRACKET SPACER BLOCK (2)	1	XXXX	XXXX	ZMA-023
2	ROLL BRACKET	1	XXXX	XXXX	ZMA-041
1	KEEL TUBE COMPLETE	1	XXXX	XXXX	YQD-012

NOTE NYLOCK NUTS SHOULD BE TIGHTENED TO BRING THE ASSEMBLY FIRMLY TOGETHER DO NOT OVERTIGHTEN

LEFT L.E. SHOWN. RIGHT L.E. IS A MIRROR OF LEFT.

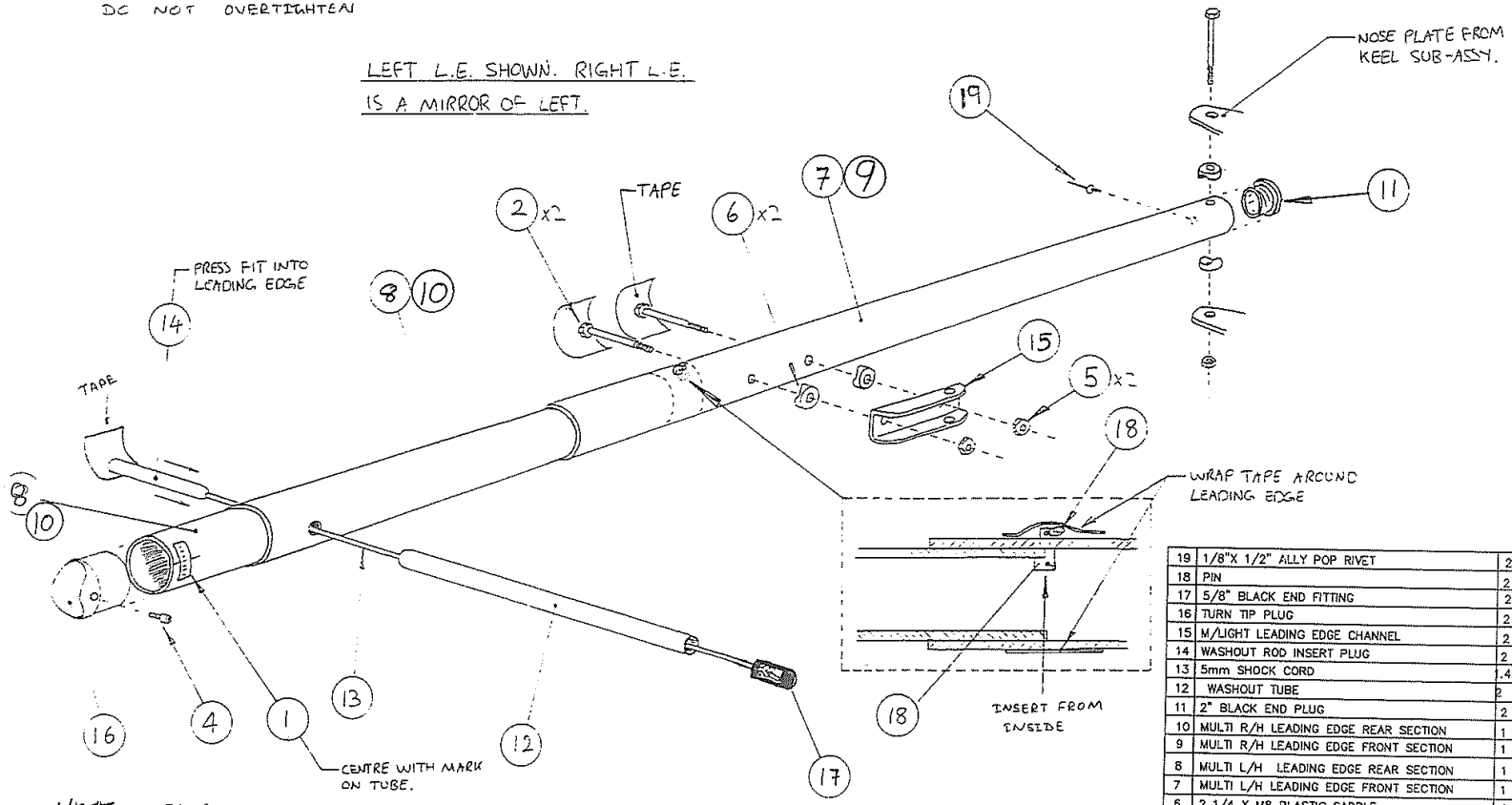

NOTE – SET TIPS 2 DIVISIONS UP RELATIVE TO QUIK. FOR INITIAL BUILD.

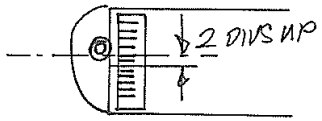

19	1/8"X 1/2" ALLY POP RIVET	2	FR4-16-001
18	PIN	2	FPCP-001
17	5/8" BLACK END FITTING	2	PEP-003
16	TURN TIP PLUG	2	ZMP-055
15	M/LIGHT LEADING EDGE CHANNEL	2	ZCH-018
14	WASHOUT ROD INSERT PLUG	2	ZIN-010
13	5mm SHOCK CORD	1.4M	VSC5-001
12	WASHOUT TUBE	2	YQB-72130
11	2" BLACK END PLUG	2	PEP16-001
10	MULTI R/H LEADING EDGE REAR SECTION	1	YQD-026
9	MULTI R/H LEADING EDGE FRONT SECTION	1	YQD-024
8	MULTI L/H LEADING EDGE REAR SECTION	1	YQD-025
7	MULTI L/H LEADING EDGE FRONT SECTION	1	YQD-023
6	2 1/4 X M8 PLASTIC SADDLE	8	PMS-M8-22
5	1/4 UNF P TYPE NYLOCK NUT	6	FNU4-NP
4	M6 X 20mm SOCKET CAP SCREW	2	FCM6-20
2	1/4 UNF HEX BOLT	4	AN4-27A
1	TIP ADJUST PLACARD	2	DP-030

Iss.	Description of revision	Date	Approved	Checked	Drawn
A	INITIAL ISSUE	25/11/05	WBA	WBA	

MULTI LEADING EDGE ASSEMBLY

P&M AVIATION Ltd
ELM TREE PARK,
MANTON,
MARLBOROUGH,
WILTSHIRE,
SN8 1PS

Drawing No: YQD-020

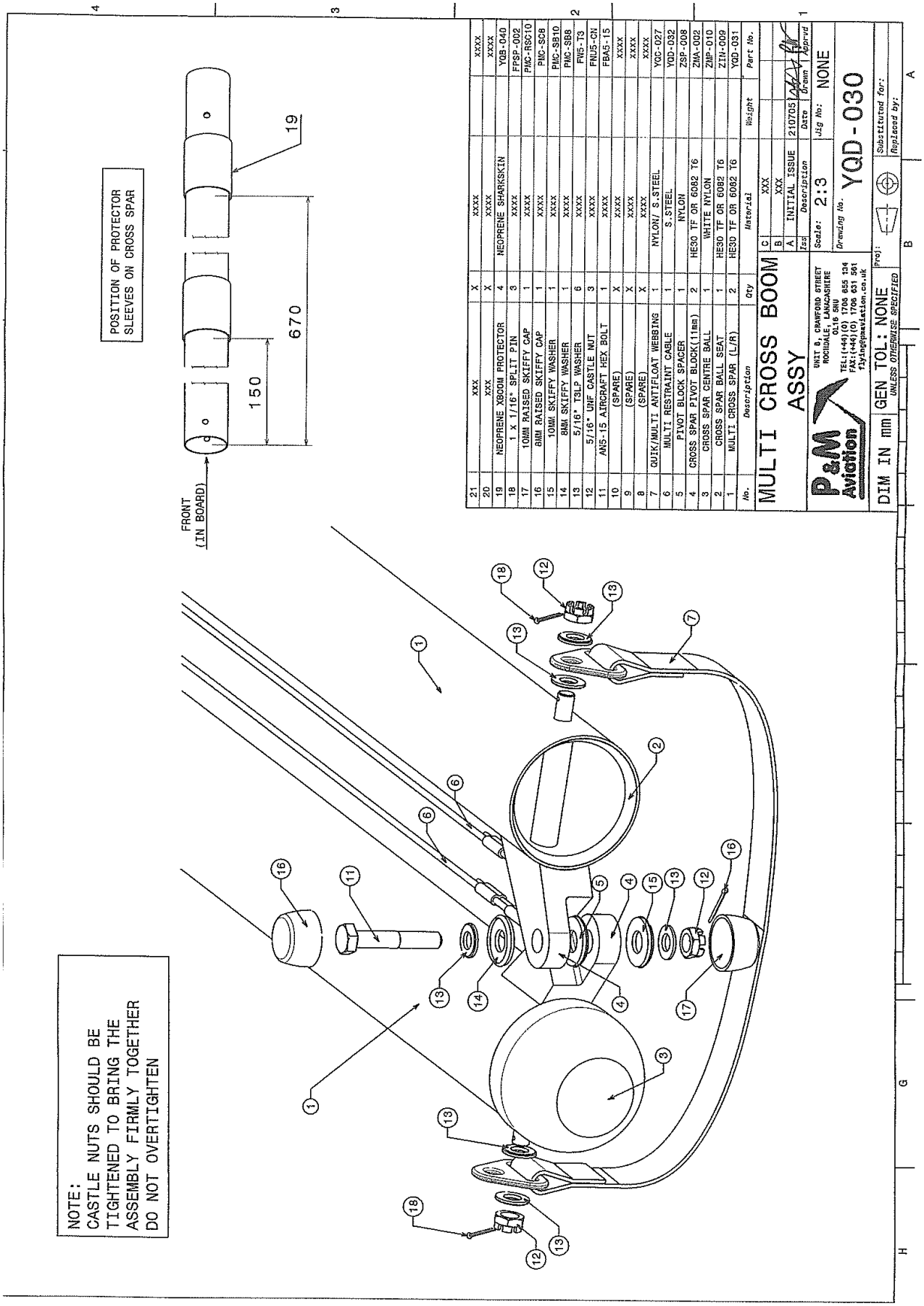

No.	Description	Qty	Material	Weight	Part No.
21	XXX	X	XXXX		XXXX
20	XXX	X	XXXX		XXXX
19	NEOPRENE X800M PROTECTOR	4	NEOPRENE SHARKSKIN		YQB-040
18	1 X 1/16" SPLIT PIN	3	XXXX		FPSP-002
17	10MM RAISED SKIFFY CAP	1	XXXX		PMC-RSC10
16	8MM RAISED SKIFFY CAP	1	XXXX		PMC-SC8
15	10MM SKIFFY WASHER	1	XXXX		PMC-SB10
14	8MM SKIFFY WASHER	1	XXXX		PMC-SB8
13	5/16" T3LP WASHER	6	XXXX		FW5-T3
12	5/16" UNF CASTLE NUT	3	XXXX		FNU5-CN
11	AN5-15 AIRCRAFT HEX BOLT	1	XXXX		FBA5-15
10	(SPARE)	X	XXXX		XXXX
9	(SPARE)	X	XXXX		XXXX
8	(SPARE)	X	XXXX		XXXX
7	QUIK/MULTI ANTIFLOAT WEBBING	1	NYLON/ S.STEEL		YQC-027
6	MULTI RESTRAINT CABLE	1	S.STEEL		YQD-032
5	PIVOT BLOCK SPACER	1	NYLON		ZSP-008
4	CROSS SPAR PIVOT BLOCK(11mm)	2	HE30 TF OR 6082 T6		ZMA-002
3	CROSS SPAR CENTRE BALL	1	WHITE NYLON		ZMP-010
2	CROSS SPAR BALL SEAT	1	HE30 TF OR 6082 T6		ZIN-009
1	MULTI CROSS SPAR (L/R)	2	HE30 TF OR 6082 T6		YQD-031

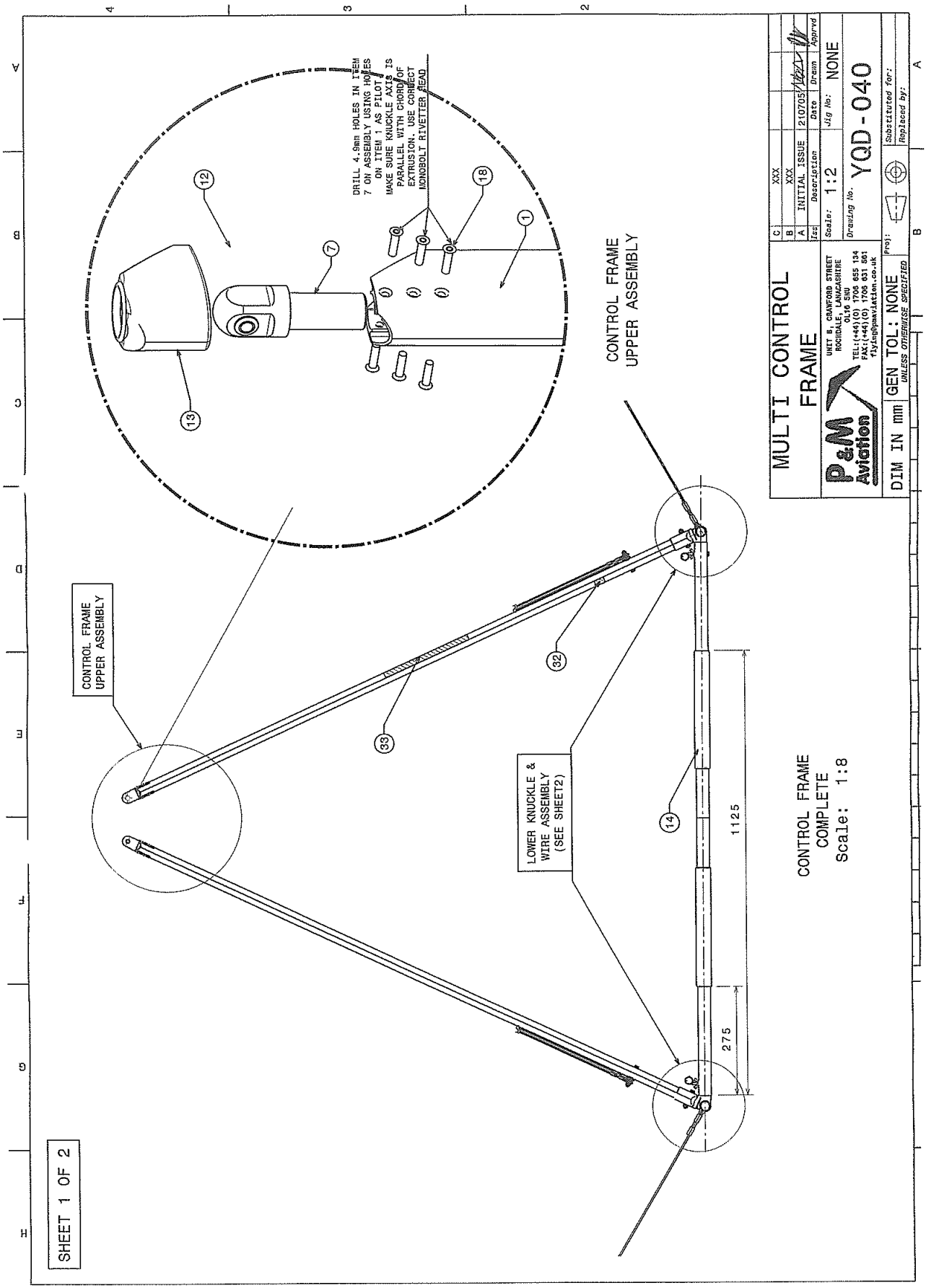

MULTI CONTROL FRAME
P&M Aviation
UNIT 8, CRAWFORD STREET
ROCHDALE, LANACASHIRE
OL16 5HU
TEL:(+44)(0) 1706 655 134
FAX:(+44)(0) 1706 631 861
flying@pmaviation.co.uk
DIM IN mm
GEN TOL: NONE
UNLESS OTHERWISE SPECIFIED
Proj:
Substituted for:
Replaced by:
C XXX
B XXX
A INITIAL ISSUE 210705
Iss Description Date Drawn Apprvd
Scale: 1:2
Jig No: NONE
Drawing No. YQD-040
DRILL 4.9mm HOLES IN ITEM 7 ON ASSEMBLY USING HOLES ON ITEM 1 AS PILOT. MAKE SURE KNUCKLE AXIS IS PARALLEL WITH CHORD OF EXTRUSION. USE CORRECT MONOBOLT RIVETTER HEAD
CONTROL FRAME UPPER ASSEMBLY
CONTROL FRAME UPPER ASSEMBLY
LOWER KNUCKLE & WIRE ASSEMBLY (SEE SHEET2)
1125
275
CONTROL FRAME COMPLETE Scale: 1:8
SHEET 1 OF 2

SHEET 2 OF 2

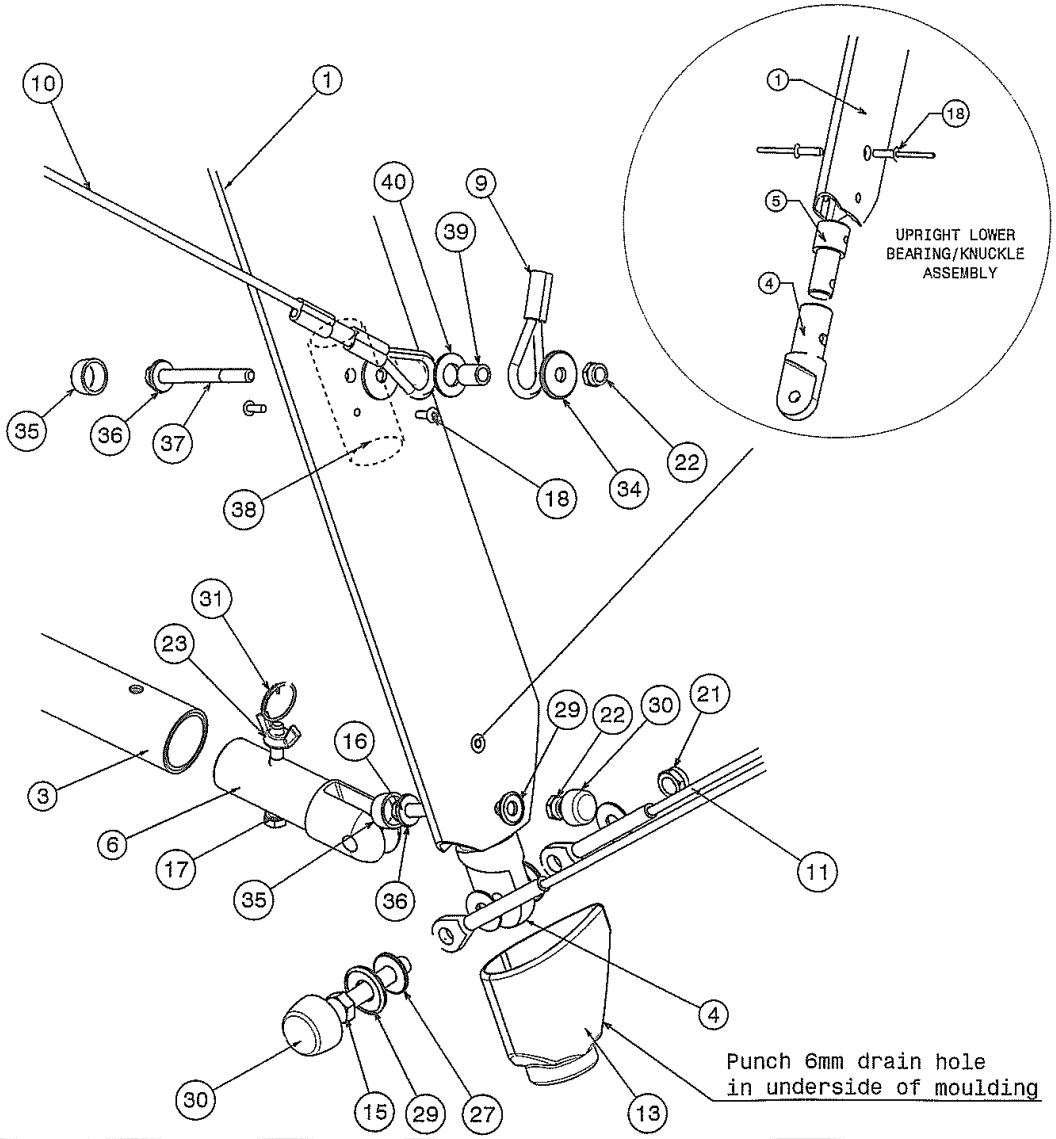

No.	Description	Qty	Material	Weight	Part No.
46					
45	XXX	X	XXXX	XXXX	
44	XXX	X	XXXX	XXXX	
43	XXX	X	XXXX	XXXX	
42	XXX	X	XXXX		
41	XXX	X	XXXX		
40	10MM WASHER	2	XXXX		FW10-B
39	SPACER BUSH	2	XXXX	XXXX	ZSP-308
38	AEROFOIL PLUG	2	XXXX	XXXX	ZMP-135
37	AN4-22A HEX BOLT	2	XXXX	XXXX	FBA4-22A
36	6MM SKIFFY RING	4	XXXX	XXXX	PMC-SC6
35	6MM RAISED SKIFFY CAP	4			PMC-RSC6
34	1/4" X 3/4 MS WASHER	6	XXXX	XXXX	FW4-12
33	LARGE 2 COLOUR STICKER	2	XXXX	XXXX	DVL-004
32	MAUW AND MAIN PLACARDS	1	XXXX	XXXX	DP-058
31	5/8" SAFETY RING	2	XXXX	XXXX	SPSR-001
30	8MM RAISED SKIFFY CAP	4	XXXX	XXXX	PMC-SC8
29	8MM SKIFFY RING	4	XXXX	XXXX	PMC-SB8
28	1/4" M STEEL WASHER	8	XXXX	XXXX	FW4-T4
27	5/16" M STEEL WASHER T4LP	2	XXXX	XXXX	FW5-T4
26	(SPARE)	X	XXXX	XXXX	XXXX
25	(SPARE)	1	XXXX	XXXX	XXXX
24	(SPARE)	1	XXXX	XXXX	XXXX
23	1/4" UNF WING NUT	2	XXXX	XXXX	FNU4-WN
22	1/4" UNF P TYPE NYLOCK NUT	2	XXXX	XXXX	FNU4-NP
21	5/16" UNF P TYPE NYLOCK NUT	2	XXXX	XXXX	FNU5-NP
20	(SPARE)	1	XXXX	XXXX	XXXX
19	(SPARE)	1	XXXX	XXXX	XXXX
18	3/16 X 3/8 C.SUNK AVDEL MNBOLT	16	AVDEL 02761-00615	XXXX	FR6-12-00
17	AN4-15 HEX A/C BOLT	2	XXXX	XXXX	FBA4-15
16	AN4-17A HEX A/C BOLT	2	XXXX	XXXX	FBA4-17A
15	AN5-21A HEX A/C BOLT	2	XXXX	XXXX	FBA5-21A
14	BASE BAR HAND GRIPS	2	XXXX	XXXX	PMM-009B
13	EXTRUSION END BOOT	2	XXXX	XXXX	PMM-048
12	FMB-0809.5DU FLANGED BEARING	4	XXXX	XXXX	XXXX
11	LOWER SIDE RIGGING	4	XXXX	XXXX	YQD-045
10	LOWER FRONT RIGGING	2	XXXX	XXXX	YQD-047
9	LOWER REAR RIGGING	2	XXXX	XXXX	YQD-046
8	SPARE	X	XXXX	XXXX	XXXX
7	C FRAME SIDE TOP KNUCKLE	2	XXXX	XXXX	ZKN-133
6	C FRAME BASE TUBE KNUCKLE	2	XXXX	XXXX	ZKN-126
5	UPRIGHT ROTATOR BEARING	2	XXXX	XXXX	ZMP-132
4	C FRAME SIDE LOWER KNUCKLE	2	XXXX	XXXX	ZKN-132
3	CONTROL FRAME BASE TUBE	1	XXXX	XXXX	YQC-042
2	(SPARE)	X	XXXX	XXXX	XXXX
1	CONTROL FRAME UPRIGHT (L/R)	2	XXXX	XXXX	YQD-041

MULTI CONTROL FRAME

Iss	Description	Date	Drawn	Apprvd
C	XXX			
B	XXX			
A	INITIAL ISSUE	210705		

P&M Aviation
UNIT B, CRAWFORD STREET
ROCHDALE, LANACASHIRE
OL16 5NU
TEL:(+44)(0) 1706 655 134
FAX:(+44)(0) 1706 631 561
flying@pmaviation.co.uk

Scale: 1:2 | Jig No: NONE

Drawing No. YQD-040

DIM IN mm | GEN TOL: NONE UNLESS OTHERWISE SPECIFIED | Proj:

Substituted for:
Replaced by:

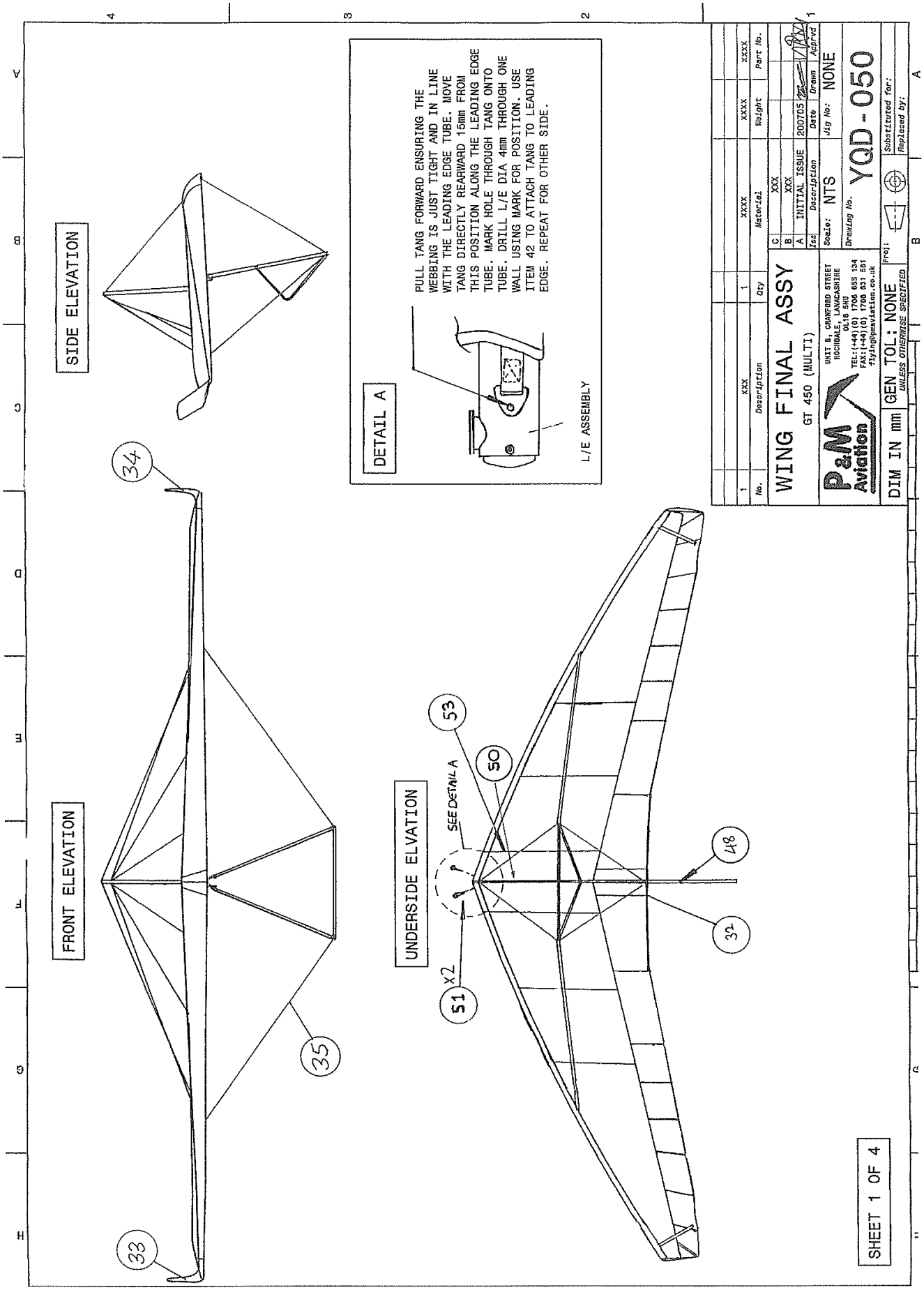
SIDE ELEVATION
FRONT ELEVATION
UNDERSIDE ELVATION
DETAIL A
PULL TANG FORWARD ENSURING THE WEBBING IS JUST TIGHT AND IN LINE WITH THE LEADING EDGE TUBE. MOVE TANG DIRECTLY REARWARD 15mm FROM THIS POSITION ALONG THE LEADING EDGE TUBE. MARK HOLE THROUGH TANG ONTO TUBE. DRILL L/E DIA 4mm THROUGH ONE WALL USING MARK FOR POSITION. USE ITEM 42 TO ATTACH TANG TO LEADING EDGE. REPEAT FOR OTHER SIDE.
L/E ASSEMBLY
SEE DETAIL A
x2
33
34
35
48
50
51
53
32
SHEET 1 OF 4
WING FINAL ASSY
GT 450 (MULTI)
P&M Aviation
UNIT B, CRANFORD STREET
ROCHDALE, LANACASHIRE
OL16 5NU
TEL:(+44)(0) 1706 655 134
FAX:(+44)(0) 1706 631 561
flying@pmaviation.co.uk
DIM IN mm
GEN TOL: NONE
UNLESS OTHERWISE SPECIFIED
Scale: NTS
Jig No: NONE
Drawing No. YQD-050
Isa Description Date Drawn Apprvd
A INITIAL ISSUE 200705
No. Description Qty Material Weight Part No.
1 XXX 1 XXXX XXXX XXXX
Substituted for:
Replaced by:

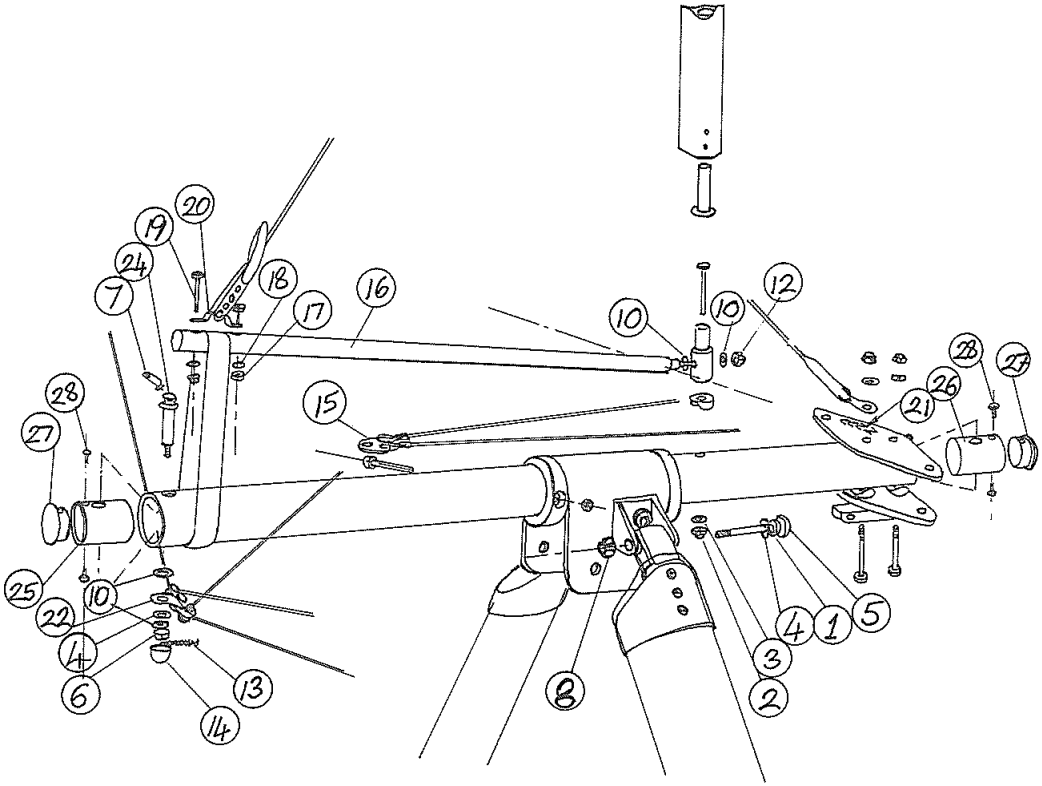

No.	Description	Qty	Material	Weight	Part No.
41	xxx	1	xxxx	xxxx	xxxx
40	xxx	1	xxxx	xxxx	xxxx
39	xxx	1	xxxx	xxxx	xxxx
38	xxx	1	xxxx	xxxx	xxxx
37	xxx	1	xxxx	xxxx	xxxx
36	xxx	1	xxxx	xxxx	xxxx
35	xxx	1	xxxx	xxxx	xxxx
34	LH TIP FIN	1	xxxx	xxxx	YWD-081
33	RH TIP FIN	1	xxxx	xxxx	YQD-082
32	MULTI BATTEN PLAN ASSEMBLY	1	xxxx	xxxx	YQD-71000
31	1/4" NYLOCK 'P' TYPE NUT	1	xxxx	xxxx	FNU4-NP
30	1/4"X 3/16 WASHER	1	xxxx	xxxx	FW4-12
29	SKIFFY WASHER 10mm	3	xxxx	xxxx	PMC-SB10
28	M5X10 PLASTIC PAN HEAD SCREW	4	xxxx	xxxx	FPS5-10
27	1 5/8" BLACK END PLUG	2	xxxx	xxxx	PEP13-001
26	KEEL RIGGING STRUT ADAPTOR (F)	1	xxxx	xxxx	YQC-018A
25	KEEL RIGGING STRUT ADAPTOR (R)	1	xxxx	xxxx	YQC-018B
24	KEEL RESTRAINT STUD	1	xxxx	xxxx	FMSS-1
23	KEEL POCKET LOAD STRAP	1	xxxx	xxxx	YQC-066
22	LOWER REAR WIRE ASSEMBLY	1	xxxx	xxxx	YQD-046
21	LOCATION OF SERIAL NUMBER	1	xxxx	xxxx	N/A
20	S. STEEL DECK EYE	1	xxxx	xxxx	RM-1
19	M5X40 HEX HT BOLT	2	xxxx	xxxx	FBM5-40
18	3/16 WASHER	2	xxxx	xxxx	W2BA-T2
17	M5 NYLOCK 'T; TYPE NUT	2	xxxx	xxxx	FNM5-NT
16	FIN TUBE ASSEMBLY	1	xxxx	xxxx	YQD-070
15	RESTRAINT CABLE ASSEMBLY	1	xxxx	xxxx	YQD-052
14	SKIFFY CAP ~~8~~ mm RAISED	~~4~~	xxxx	xxxx	PMC-RSC8
13	1/16 SPLIT PIN	1	xxxx	xxxx	FPSP-002
12	M6 NYLOCK 'T' TYPE NUT	2	xxxx	xxxx	FNM6-NT
11	UPPER RIGGING REAR LINK WIRE	1	xxxx	xxxx	YQD-054
10	1/4 M/STEEL WASHER T4LP	5	xxxx	xxxx	FMW-T4
9	KING POST ASEMBLY	1	xxxx	xxxx	YQD-051
8	AN5 NYLOC NUT	2	xxxx	xxxx	008-135
7	SAFETY CLIP	1	xxxx	xxxx	FP-003
6	AN4 CASTLE NUT	1	xxxx	xxxx	008-220
5	SKIFFY CAP 8mm	2	xxxx	xxxx	PMC-SC8
4	SKIFFY WASHER 8mm	2	xxxx	xxxx	PMC-SB8
3	5/16 TBL3 WASHER	2	xxxx	xxxx	FW5-T3
2	~~M8~~ NYLOCK 'T' TYPE NUT	~~1~~	xxxx	xxxx	FNM8-NT
1	AN5-20A HEX HT BOLT	2	xxxx	xxxx	AN5-20A

NOTE: ENSURE RESTRAINT STUD IS FULLY LOCATED THROUGH KEEL AND SAFETY PIN HOLE IS AT 90 DEG TO KEEL BEFORE FASTENING WITH ITEM 31 AND APPLYING WING TENSION.

SHEET 2 OF 4

WING FINAL ASSY

GT 450 (MULTI)

Iss	Description	Date	Drawn	Apprvd
C	XXX			
B	XXX			
A	INITIAL ISSUE	200705		

P&M Aviation
UNIT B, CRAWFORD STREET
ROCHDALE, LANACASHIRE
OL16 5NU
TEL:(+44)(0) 1706 655 134
FAX:(+44)(0) 1706 631 551
flying@pmaviation.co.uk

Scale: NTS
Jig No: NONE
Drawing No. YQD-050

DIM IN mm
GEN TOL: NONE
UNLESS OTHERWISE SPECIFIED
Proj:
Substituted for:
Replaced by:

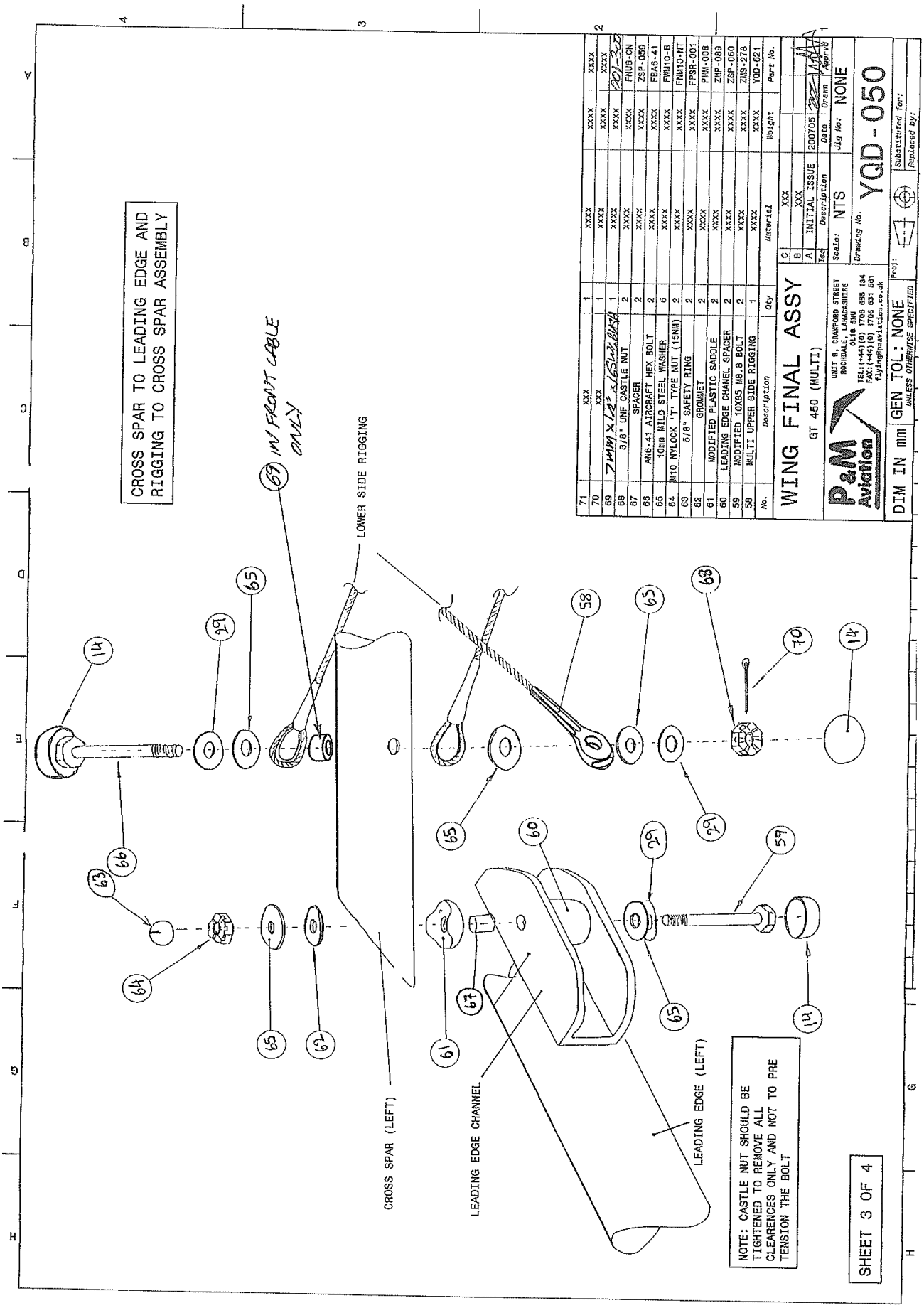
CROSS SPAR TO LEADING EDGE AND RIGGING TO CROSS SPAR ASSEMBLY
69 IN FRONT CABLE ONLY
LOWER SIDE RIGGING
CROSS SPAR (LEFT)
LEADING EDGE CHANNEL
LEADING EDGE (LEFT)
NOTE: CASTLE NUT SHOULD BE TIGHTENED TO REMOVE ALL CLEARENCES ONLY AND NOT TO PRE TENSION THE BOLT
SHEET 3 OF 4
WING FINAL ASSY
GT 450 (MULTI)
P&M Aviation
UNIT 8, CRAWFORD STREET ROCHDALE, LANACASHIRE OL16 5NU
TEL:(+44)(0) 1706 655 134
FAX:(+44)(0) 1706 651 581
flying@pmaviation.co.uk
DIM IN mm
GEN TOL: NONE
UNLESS OTHERWISE SPECIFIED
Scale: NTS
Drawing No. YQD-050
Jig No: NONE
Substituted for:
Replaced by:
Proj:
Iss Description Date Drawn Apprvd
A INITIAL ISSUE 200705
B XXX
C XXX
71 XXX 1 XXXX XXXX XXXX
70 XXX 1 XXXX XXXX XXXX
69 7mm x 1/2" x 65 Wl BUSH 1 XXXX XXXX 001-300
68 3/8" UNF CASTLE NUT 2 XXXX XXXX FNU6-CN
67 SPACER 2 XXXX XXXX ZSP-059
66 AN6-41 AIRCRAFT HEX BOLT 2 XXXX XXXX FBA6-41
65 10mm MILD STEEL WASHER 6 XXXX XXXX FWM10-B
64 M10 NYLOCK 'T' TYPE NUT (15NM) 2 XXXX XXXX FNM10-NT
63 5/8" SAFETY RING 2 XXXX XXXX FPSR-001
62 GROMMET 2 XXXX XXXX PMM-008
61 MODIFIED PLASTIC SADDLE 2 XXXX XXXX ZMP-089
60 LEADING EDGE CHANEL SPACER 2 XXXX XXXX ZSP-060
59 MODIFIED 10X85 M8.8 BOLT 2 XXXX XXXX ZMS-278
58 MULTI UPPER SIDE RIGGING 1 XXXX XXXX YQD-621
No. Description Qty Material Weight Part No.

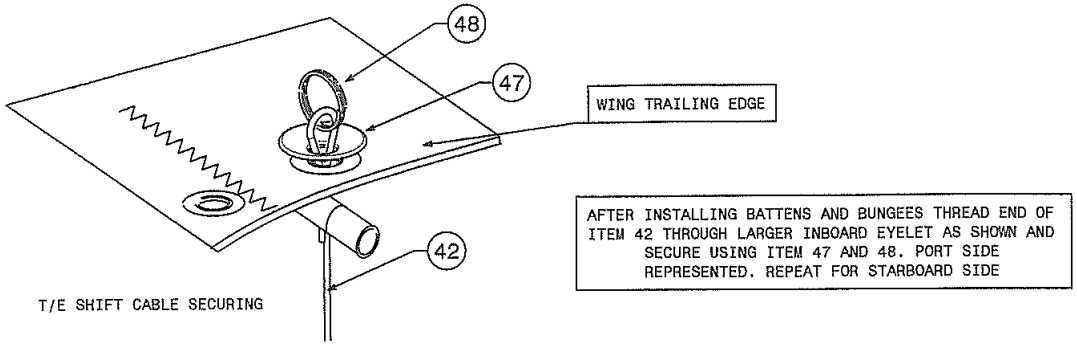

AFTER INSTALLING BATTENS AND BUNGEES THREAD END OF ITEM 42 THROUGH LARGER INBOARD EYELET AS SHOWN AND SECURE USING ITEM 47 AND 48. PORT SIDE REPRESENTED. REPEAT FOR STARBOARD SIDE

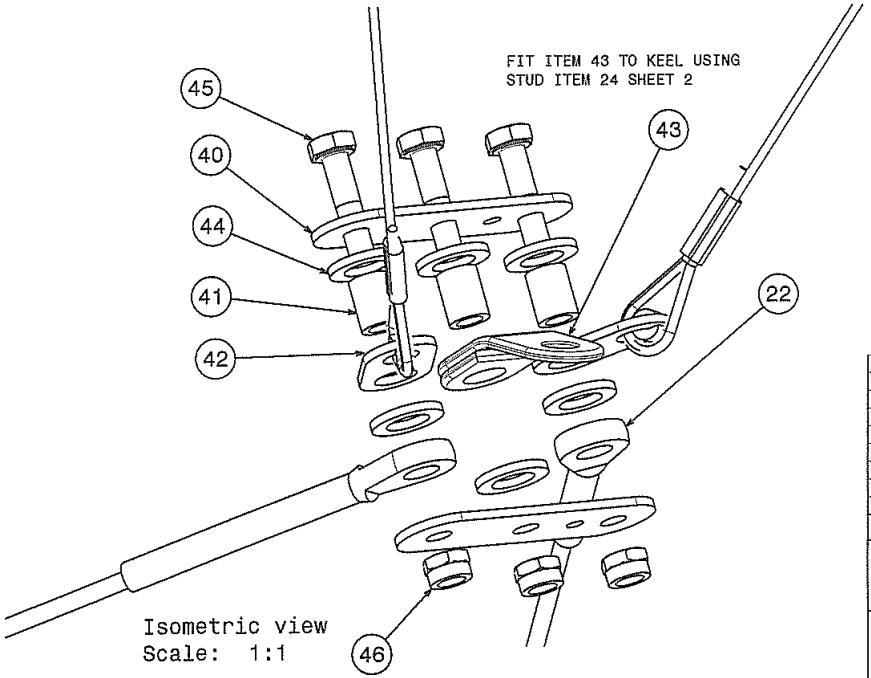

Isometric view
Scale: 1:1

APPLY CHAIN WAX TO ASSEMBLY AT ALL MOVING JOINTS.

No.	Description	Qty	Material	Weight	Part No.
48	S. STEEL SAFETY RING	1	XXXX	XXXX	FPSR-003
47	MILD STEEL DISH WASHER	2	XXXX	XXXX	034-380
46	M6 NYLOCK 'T' TYPE NUT	3	XXXX	XXXX	FNM6-NT
45	M6 X 40 HEX HT BOLT	3	XXXX	XXXX	FBM6-40
44	10 x 17 x 1.9 plastic washer	6	XXXX		FWP-011
43	ANGLED S. S. TANG, MODIFIED	1	XXXX	XXXX	RT-2H-HD3M
42	TRAILING EDGE SHIFT CABLE	2	XXXX	XXXX	YQD-0511
41	BRONZ SPACER	3	XXXX	XXXX	ZSP-308
40	S. STEEL TANG	2	XXXX	XXXX	ZPL-036

WING FINAL ASSY

GT 450 (MULTI)

Iss	Description	Date	Drawn	Apprvd
C	XXX			
B	XXX			
A	INITIAL ISSUE	081105		

P&M Aviation
UNIT B, CRAWFORD STREET
ROCHDALE, LANACASHIRE
OL16 5NU
TEL:(+44)(0) 1706 655 134
FAX:(+44)(0) 1706 631 581
flying@pmaviation.co.uk

Scale: NTS
Jig No: NONE
Drawing No. YQD-050

DIM IN mm | GEN TOL: NONE UNLESS OTHERWISE SPECIFIED | Proj:

Substituted for:
Replaced by:

SHEET 4 OF 4

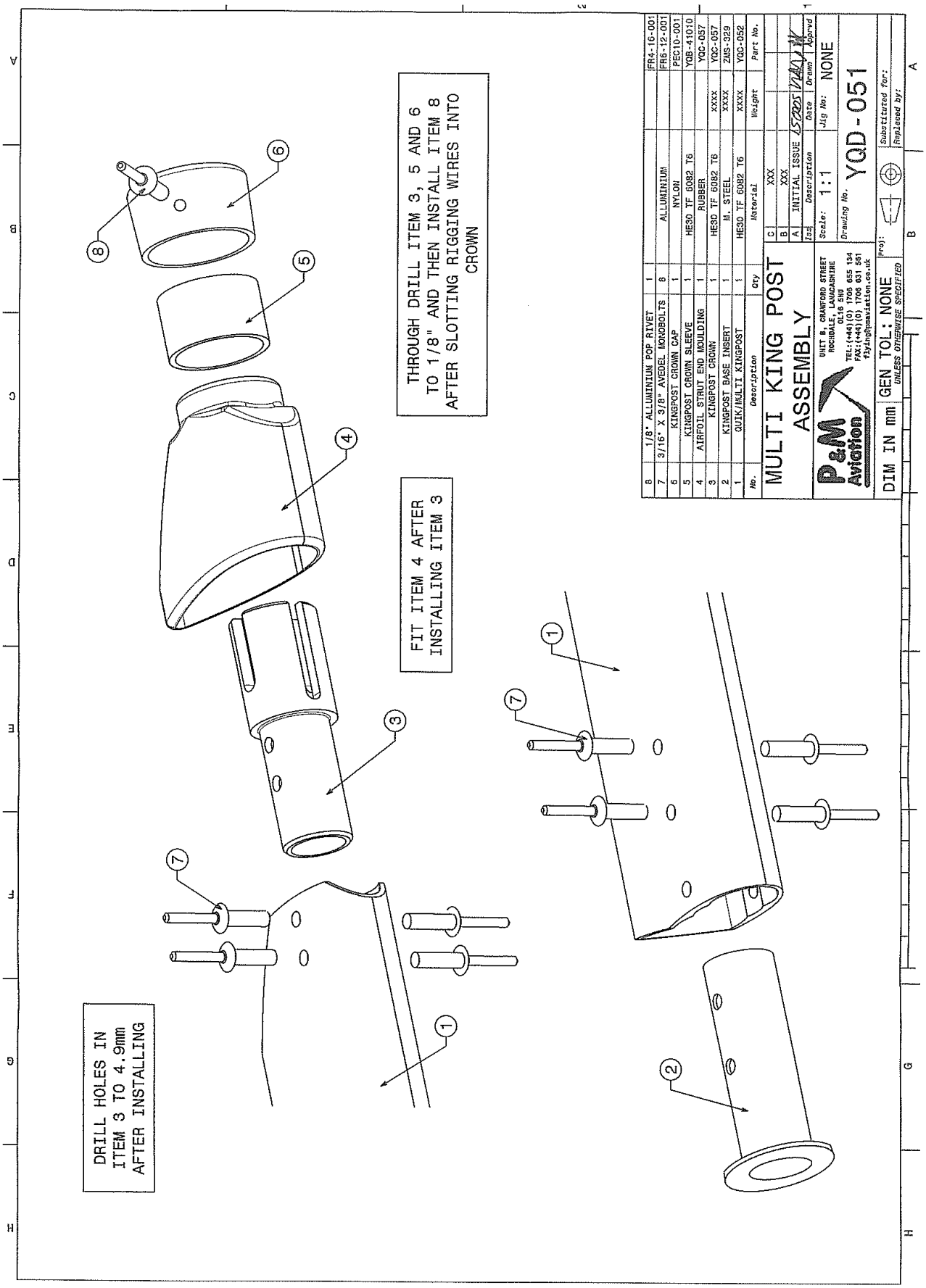
THROUGH DRILL ITEM 3, 5 AND 6 TO 1/8" AND THEN INSTALL ITEM 8 AFTER SLOTTING RIGGING WIRES INTO CROWN
FIT ITEM 4 AFTER INSTALLING ITEM 3
DRILL HOLES IN ITEM 3 TO 4.9mm AFTER INSTALLING
8 1/8" ALLUMINIUM POP RIVET 1 FR4-16-001
7 3/16" X 3/8" AVEDEL MONOBOLTS 8 ALLUMINIUM FR6-12-001
6 KINGPOST CROWN CAP 1 NYLON PEC10-001
5 KINGPOST CROWN SLEEVE 1 HE30 TF 6082 T6 YQB-41010
4 AIRFOIL STRUT END MOULDING 1 RUBBER YQC-057
3 KINGPOST CROWN 1 HE30 TF 6082 T6 XXXX YQC-057
2 KINGPOST BASE INSERT 1 M. STEEL XXXX ZMS-329
1 QUIK/MULTI KINGPOST 1 HE30 TF 6082 T6 XXXX YQC-052
No. Description Qty Material Weight Part No.
MULTI KING POST ASSEMBLY
C XXX
B XXX
A INITIAL ISSUE
Iss Description Date Drawn Apprvd
P&M Aviation
UNIT B, CRANFORD STREET ROCHDALE, LANCASHIRE OL16 5NU
TEL:(+44)(0) 1706 655 134
FAX:(+44)(0) 1706 651 551
flying@paviation.co.uk
Scale: 1:1
Drawing No. YQD-051
Jig No: NONE
Proj:
Substituted for:
Replaced by:
DIM IN mm
GEN TOL: NONE
UNLESS OTHERWISE SPECIFIED

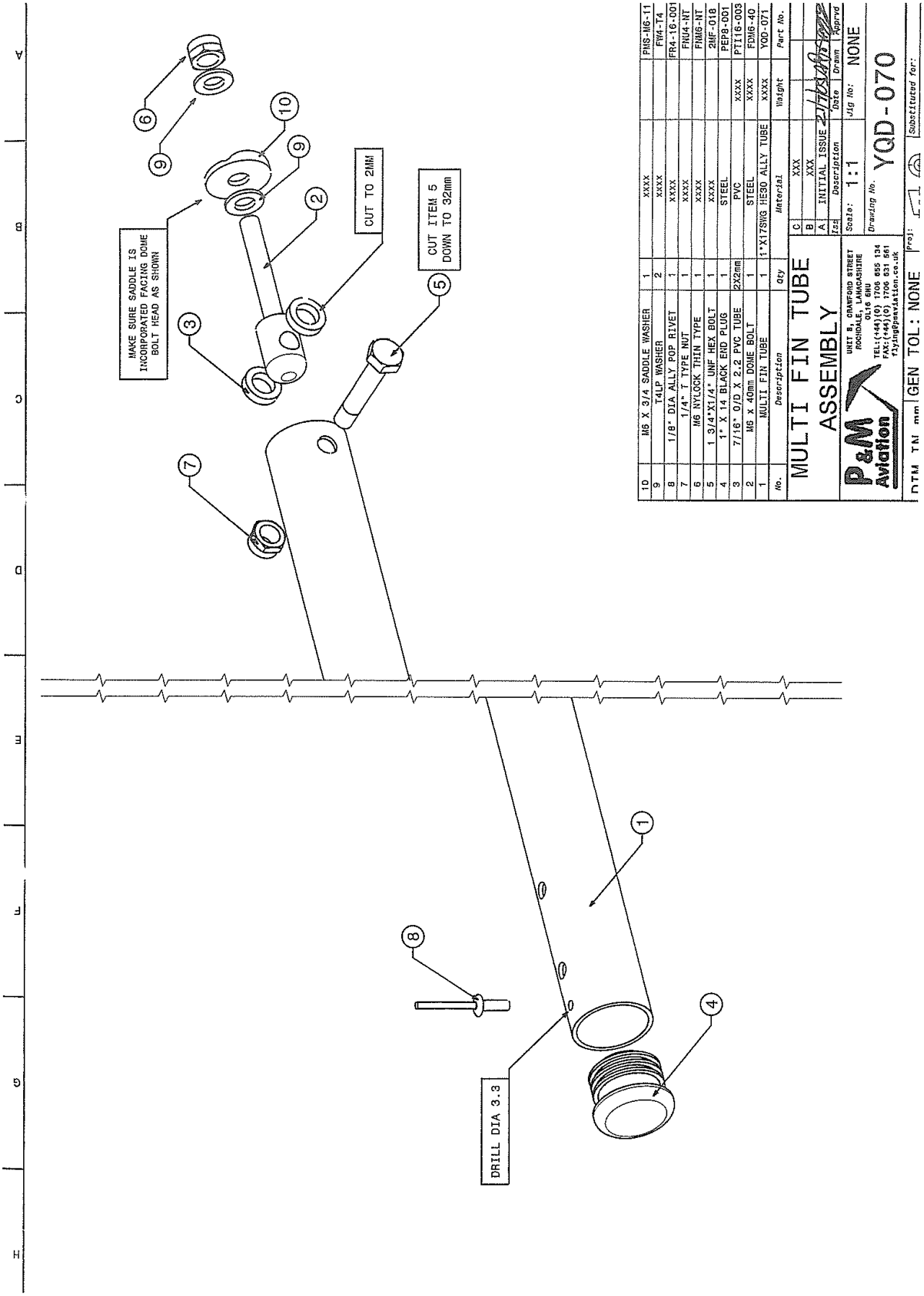
MAKE SURE SADDLE IS INCORPORATED FACING DOME BOLT HEAD AS SHOWN
CUT TO 2MM
CUT ITEM 5 DOWN TO 32mm
DRILL DIA 3.3
ID | Description | Qty | Material | Weight | Part No.
9 | M6 X 3/4 SADDLE WASHER | 1 | XXXX | | PNS-M6-11
8 | T4LP WASHER | 2 | XXXX | | FW4-T4
7 | 1/8" DIA ALLY POP RIVET | 1 | XXXX | | FR4-16-001
6 | 1/4" T TYPE NUT | 1 | XXXX | | FNU4-NT
5 | M6 NYLOCK THIN TYPE | 1 | XXXX | | FNM6-NT
4 | 1 3/4"X1/4" UNF HEX BOLT | 1 | XXXX | | 2NF-018
3 | 1" X 14 BLACK END PLUG | 1 | STEEL | | PEP8-001
2 | 7/16" O/D X 2.2 PVC TUBE | 2X2mm | PVC | XXXX | PT116-003
1 | M6 x 40mm DOME BOLT | 1 | STEEL | XXXX | FDM6-40
No. | MULTI FIN TUBE | 1 | 1"X17SWG HE30 ALLY TUBE | XXXX | YQD-071
MULTI FIN TUBE ASSEMBLY
C XXX
B XXX
A INITIAL ISSUE
Iss Description Date Drawn Approved
P&M Aviation
UNIT B, CRAWFORD STREET ROCHDALE, LANCASHIRE OL16 5BW
TEL:(+44)(0) 1706 655 134
FAX:(+44)(0) 1706 631 561
flyingpaviation.co.uk
Scale: 1:1
Jig No: NONE
Drawing No. YQD-070
DTM TN mm GEN TOL: NONE
Proj:
Substituted for:

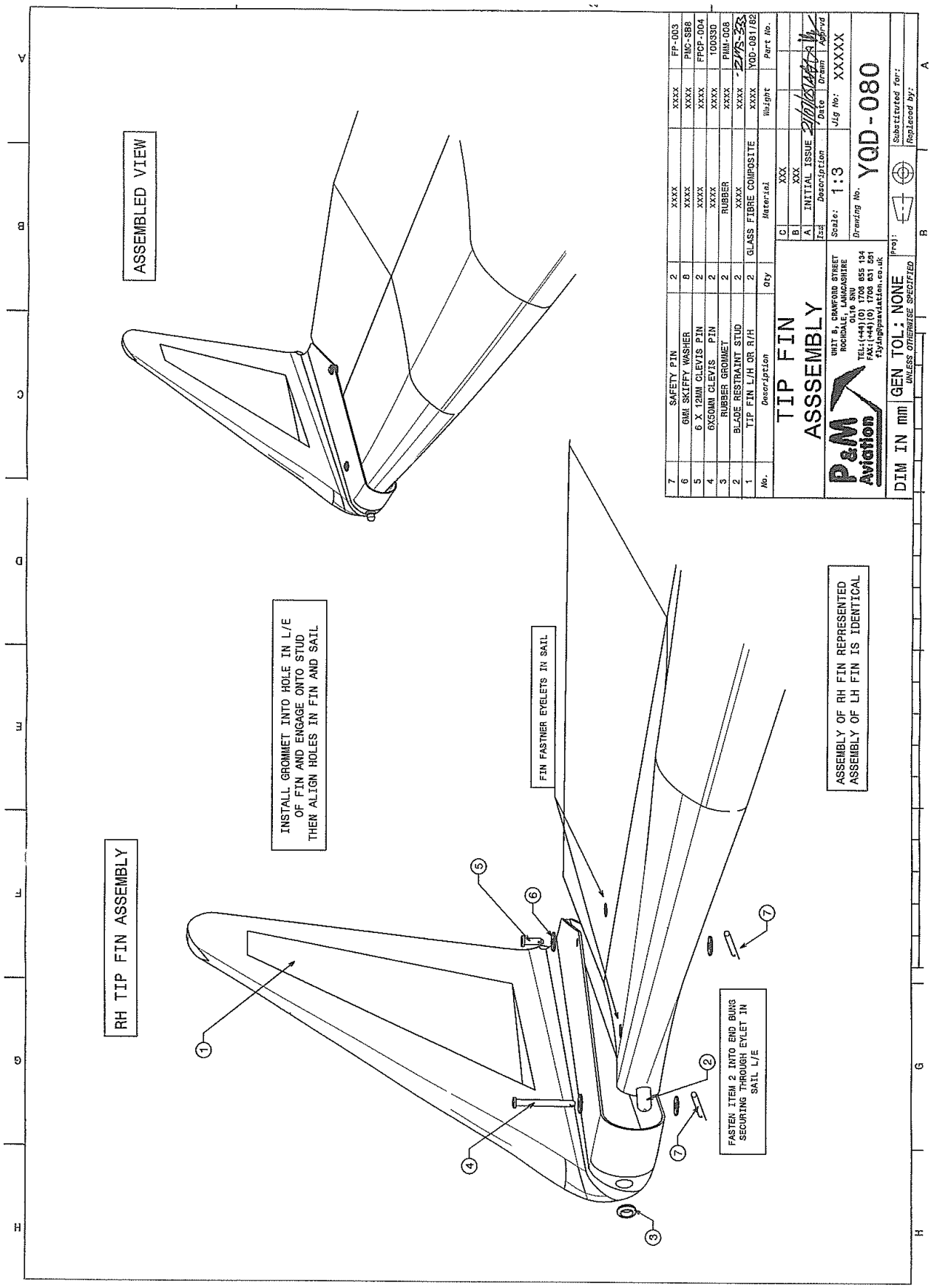
ASSEMBLED VIEW
RH TIP FIN ASSEMBLY
INSTALL GROMMET INTO HOLE IN L/E OF FIN AND ENGAGE ONTO STUD THEN ALIGN HOLES IN FIN AND SAIL
FIN FASTNER EYELETS IN SAIL
ASSEMBLY OF RH FIN REPRESENTED ASSEMBLY OF LH FIN IS IDENTICAL
FASTEN ITEM 2 INTO END BUNG SECURING THROUGH EYLET IN SAIL L/E
1
2
3
4
5
6
7
7 SAFETY PIN 2 XXXX XXXX FP-003
6 6MM SKIFFY WASHER 8 XXXX XXXX PMC-SB8
5 6 X 12MM CLEVIS PIN 2 XXXX XXXX FPCP-004
4 6X50MM CLEVIS PIN 2 XXXX XXXX 100330
3 RUBBER GROMMET 2 RUBBER XXXX PMM-008
2 BLADE RESTRAINT STUD 2 XXXX XXXX
1 TIP FIN L/H OR R/H 2 GLASS FIBRE COMPOSITE XXXX YQD-081/82
No. Description Qty Material Weight Part No.
TIP FIN ASSSEMBLY
C XXX
B XXX
A INITIAL ISSUE
Iss Description Date Drawn Apprvd
Scale: 1:3
Jig No: XXXXX
Drawing No. YQD-080
P&M Aviation
UNIT 8, CRAWFORD STREET ROCHDALE, LANCASHIRE OL16 5NU
TEL:(+44)(0) 1706 655 134
FAX:(+44)(0) 1706 651 581
flying@pmaviation.co.uk
DIM IN mm
GEN TOL: NONE
UNLESS OTHERWISE SPECIFIED
Proj:
Substituted for:
Replaced by:

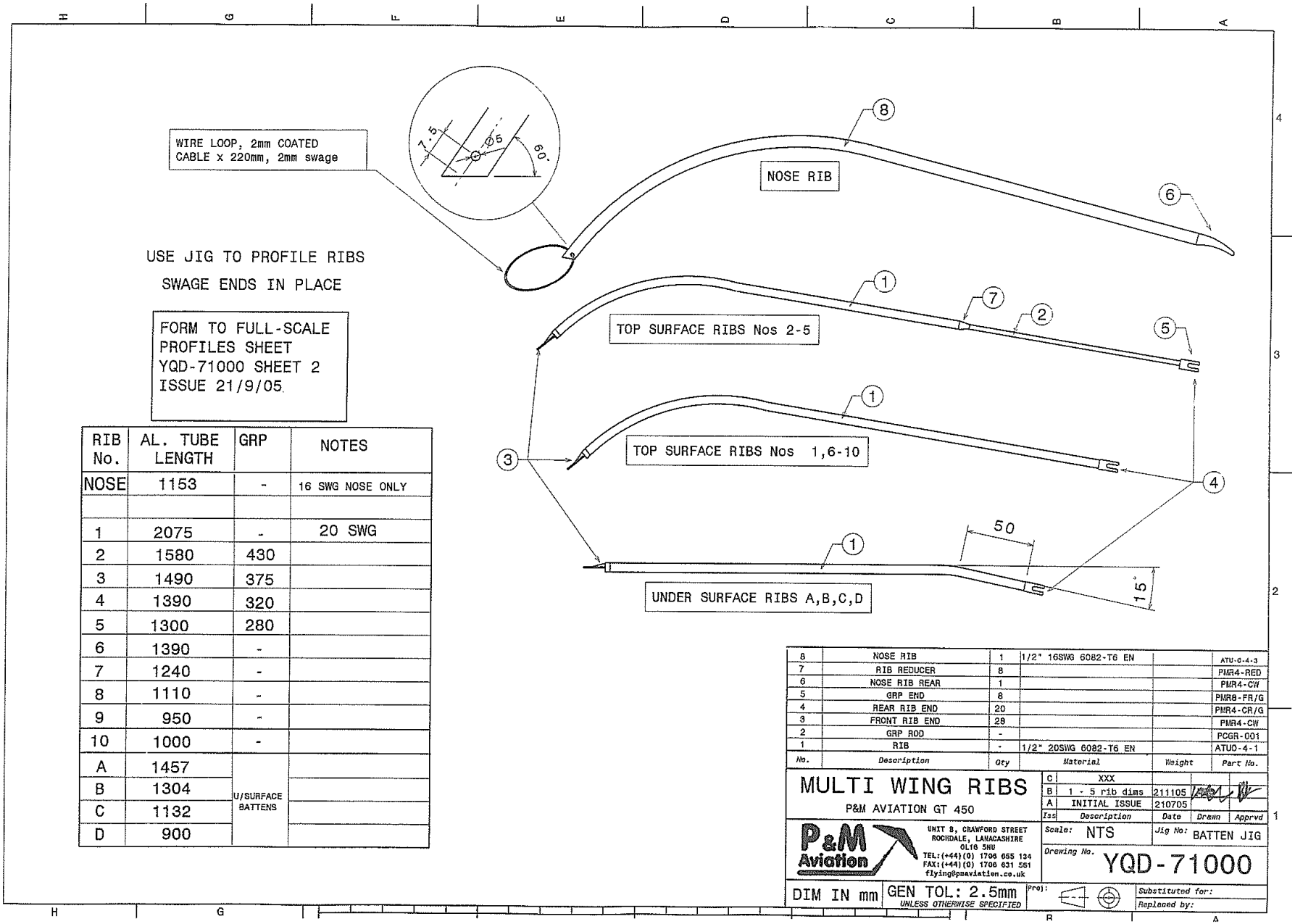

RIB No.	AL. TUBE LENGTH	GRP	NOTES
NOSE	1153	-	16 SWG NOSE ONLY
1	2075	-	20 SWG
2	1580	430	
3	1490	375	
4	1390	320	
5	1300	280	
6	1390	-	
7	1240	-	
8	1110	-	
9	950	-	
10	1000	-	
A	1457	U/SURFACE BATTENS	
B	1304		
C	1132		
D	900		

No.	Description	Qty	Material	Weight	Part No.
8	NOSE RIB	1	1/2" 16SWG 6082-T6 EN		ATU-0-4-3
7	RIB REDUCER	8			PMR4-RED
6	NOSE RIB REAR	1			PMR4-CW
5	GRP END	8			PMR8-FR/G
4	REAR RIB END	20			PMR4-CR/G
3	FRONT RIB END	28			PMR4-CW
2	GRP ROD	-			PCGR-001
1	RIB	-	1/2" 20SWG 6082-T6 EN		ATU0-4-1

Iss	Description	Date	Drawn	Apprvd
C	XXX			
B	1 - 5 rib dims	211105		
A	INITIAL ISSUE	210705		

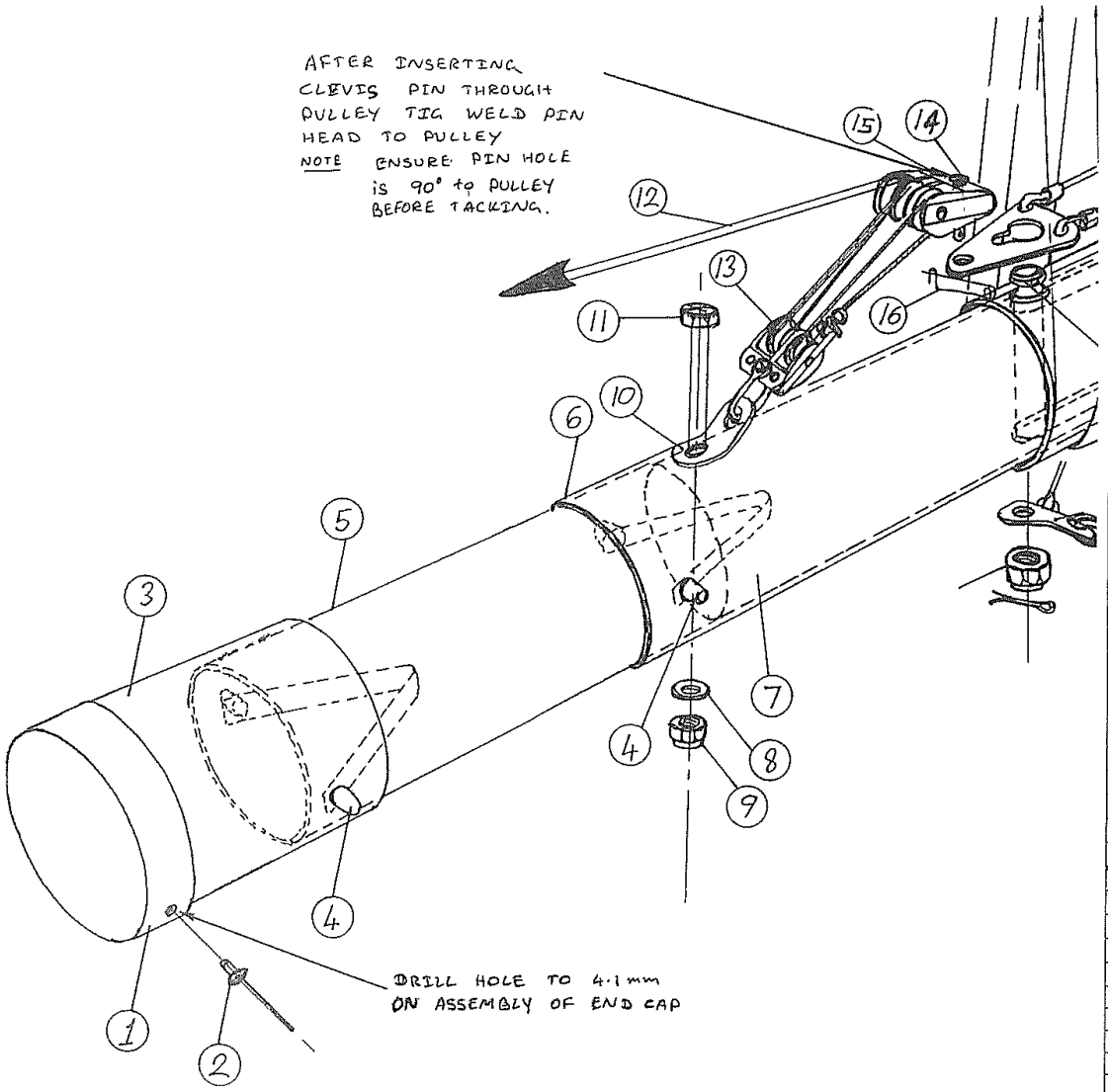

16	SAFETY PIN	1	FP-003
15	TRIPPLE PULLEY BLOCK	1	RP-8
14	4.75mmX15.8mm CLEVISE PIN	1	FPCP-005
13	TWIN PULLEY BLOCK	1	RP-9
12	3mm BLUE CHORD (6METRES)	6m	VNR-BL3
11	M6X60mm HEX HT BOLT	1	FBM6-60
10	5/16 HOLE LIGHT DUTY TANG	1	RT-185
9	M6 NYLOCK NUT 'T' TYPE	1	FNM6-NT
8	1/4 T.3 L.P. M/S WASHER	1	FW4-T3
7	RIGGING TOOL SLT TUBE-INNER	1	YQC-014
6	RIGGING TOOL SLT TUBE-OUTER	1	YQC-013
5	RIGGING TOOL EXT TUBE-INNER	1	YQC-015
4	BUTTON PIN	2	FPBP-001
3	RIGGING TOOL EXT TUBE-OUTER	1	YQC-016
2	4mmX8mm ALLY POP RIVET	1	FR4-8-002
1	END CAP (YELLOW)	1	PEC50-001

Iss.	Description of revision	Date	Approved
A	INITIAL ISSUE	7/10/02	

	Date	Name
Drawn	7/10/02	
Checked	7/10/02	

QUIK KEEL RIGGING STRUT ASSEMBLY

DIM. IN mm | SCALE: NTS | PROJ

GEN. TOL. +-: 0.1

PEGASUS AVIATION

Drawing/Part No: YQC-017